# XS series

Low profile robust proportional fingertip controllers
• non-contacting Hall effect technology

## DISTINCTIVE FEATURES

**One or two axis, Metal mechanism**
**Analog or PWM outputs**
**Low profile; < 45 mm above panel**
**5 V or 3.3 V operation**
**IP66 front panel sealing**

## ENVIRONMENTAL SPECIFICATIONS

- Operating Temperature: -30 °C to +85 °C
- Storage Temperature: -40 °C to +110 °C
- Sealing: IP66
- EMC Immunity Level: EN61000-4-3 80 MHz-6 GHz, 10-1 V/m plus 80MHz-2.7GHz, 100V/m (Extended)
- EMC Emissions Level: CISPR 16-1, 16-2 30-230 MHz/230-1000MHz/1-3 GHz/3-6 GHz, 50 dBµV/m/57 dBµV/m/76 dBµV/m/80 dBµV/m
- ESD: IEC 61000-4-2 (Extended): ±8 kV, Air: ±15 kV
- Power-frequency magnetic field: IEC 61000-4-8 30 A/m elevated to 400 A/m
- Electromagnetic fields: 4 mT static magnetic field (3200A/m DC)
- Radio-frequency common mode: IEC 61000-4-6 150 kHz-80 MHz, 10 V
- Fast transients on signal ports: IEC 61000-4-4 ±2 kV
- Fast transients on power ports: IEC 61000-4-4 ±2 kV
- Surges on signal ports: IEC 61000-4-5 ±1 kV
- Free fall: 1m
- Random vibration for handheld device: IEC 60068-2-64

## ELECTRICAL SPECIFICATIONS

- Output Voltage Range: ±10% x V to ±50% x V
- Output at Center: V/2 ±(5% x gain)
- Power Supply: 5 V ±0.5 V transient free; 3.3 V ±0.1 V (configuration 2)
- Output impedance: 10 Ω
- Overvoltage max: +20 V

The company reserves the right to change specifications without notice.

# XS series

Low profile robust proportional fingertip controllers
• non-contacting Hall effect technology

## MECHANICAL SPECIFICATIONS

- Operating Force: 1 N - 2.5 N (Dependant on configuration)
- Maximum Load: 400 N (89.921 lbf) (subject to handle)
- Mechanical Angle of Movement:
  36° X & Y axis (subject to limiter);
  50° Z axis (subject to handle)
- Expected Mechanical Life: 10 million lifecycles
- Mass/weight: 100 g (3.53 oz) nominal
- Lever Action (centering): Spring

## MATERIALS

- Shaft: Stainless steel
- Boot: Neoprene
- Handles: Nylon

## CONNECTIONS

The joystick is fitted, as standard, with 150 mm long BS6360 rated cables and an industry standard 2.5 mm pitch connector(s). Further non-standard connectors and cable options are available upon request.

CONFIGURATIONS 1 & 2

Joysticks are supplied with a seven way connector as standard. If the joystick is specified with a pushbutton handle, the connector will be nine way.

| PIN | FUNCTION | COLOR |
|---|---|---|
| 1 | 0V | Black |
| 2 | Center Tap Reference | Green |
| 3 | Z Axis Output - Where Specified | Purple |
| 4 | Y Axis Output | Yellow |
| 5 | X Axis Output- Where Specified | Blue |
| 6 | +V | Red |
| 7 | Center Detect | Orange |

CONFIGURATIONS 3 & 4

Joysticks are supplied with two completely independent cable assemblies for a truly dual system.

| PIN | FUNCTION | COLOR |
|---|---|---|
| 1 | 0V | Black |
| 2 | Center Tap Reference | Green |
| 3 | No connection | |
| 4 | Y Axis Output | Yellow |
| 5 | X Axis Output- Where Specified | Blue |
| 6 | +V | Red |
| 7 | No connection | |

For details on configuration 5 pinout, please contact Customer Support.

# XS series

Low profile robust proportional fingertip controllers
• non-contacting Hall effect technology

## MOUNTING

When mounting the joystick, care should be taken to site it in a position that does not make it vulnerable to damage when in use. If the joystick is intended for use in a handheld enclosure then care must be taken to protect the joystick from damage caused by dropping. Basic precautions such as mounting it at the lightest end of the enclosure so it doesn't hit the ground first or by protecting it with a guard should always be implemented for long term reliability.

The body of the joystick, on the underside of the panel, must not be subject to water spray, excessive humidity or dust. Some handles may be larger than some panel cut-outs. This may restrict the choice of mounting and bezel options. Please refer to APEM for assistance.

DROP-IN MOUNT CUT-OUT AND INSTALLATION

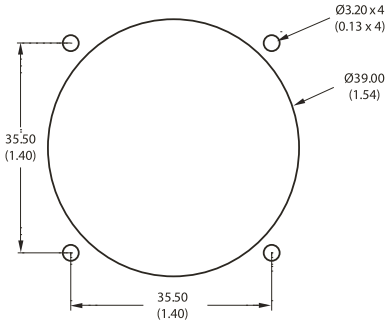

- The joystick is dropped into the panel cut-out.
- For panel thickness of <3 mm, m3 x 16 countersunk machine screws are recommended.
- Please note: Image shows a square bezel.

SUB-MOUNT CUT-OUT AND INSTALLATION

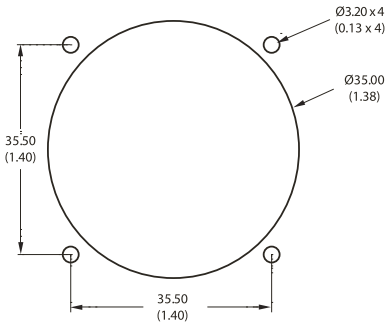

- When mounted this way the panel acts as the bezel and no separate bezel is needed.
- M3 machine screws are recommended..

NOTES:
* XS series has slotted mounting holes - allows compatibility with mounting pitches of 32.25 mm to 35.80 mm.
1. Dimensions are in mm/(inch).
2. When sub panel mounting, great care should be taken not to damage the boot, or any of the mechanism under the boot.

All panel cut-outs should be free from sharp edges and debris that may damage the boot.

# XS series

Low profile robust proportional fingertip controllers
• non-contacting Hall effect technology

## BUILD YOUR PART NUMBER

XS

**SERIES**

**CONFIGURATION**

| | |
|---|---|
| 1 | Standard |
| 2 | 3.3 V Operation |
| 3 | Dual Outputs |
| 4 | Inverse Dual Outputs |
| 5 | PWM |

**GAIN**

| | |
|---|---|
| 10 | ±10%xV |
| 25 | ±25%xV |
| 30 | ±30%xV |
| 40 | ±40%xV |
| 50 | ±50%xV |

**LIMITER**

| | |
|---|---|
| A | Single Axis |
| C | Cross |
| S | Square |
| R | Round |

**HANDLE***

| | |
|---|---|
| CA | Castle |
| DM | Dome |

A

**HANDLE COLOR**

| | |
|---|---|
| 1 | Black |

**SPRING FORCE**

| | |
|---|---|
| 1 | Light (1 N)* |
| 2 | Standard (1.3 N)* |
| 3 | Heavy (1.6 N)* |
| 4 | Extra heavy (2.5 N)* |

* = break-out force from center

**BEZEL**

| | |
|---|---|
| 0 | None |
| 6 | Square (drop-in) |

**FEEL**

| | |
|---|---|
| 20 | Guided NESW |

**MODIFIER**

| | |
|---|---|
| 00 | None |

NOTES :
Standard option availability : The following table shows which permutations of options are possible.

| CONFIGURATION | CT | CD | AXIS | | | SUPPLY | | GAIN | | | | | LIMITERS | | BOTH HANDLES | BOTH BEZELS |
|---|---|---|---|---|---|---|---|---|---|---|---|---|---|---|---|---|
| | | | X | Y | Z | 3.3V | 5V | 10 | 25 | 30 | 40 | 50 | A | C | | |
| 1 | ✓ | ✓ | ✓ | ✓ | ✓ | x | ✓ | ✓ | ✓ | ✓ | ✓ | ✓ | ✓ | ✓ | ✓ | ✓ |
| 2 | x | x | ✓ | ✓ | ✓ | ✓ | x | x | x | x | x | ✓ | ✓ | ✓ | ✓ | ✓ |
| 3 | x | x | ✓ | ✓ | ✓ | x | ✓ | ✓ | ✓ | ✓ | ✓ | ✓ | ✓ | ✓ | ✓ | ✓ |
| 4 | x | x | ✓ | ✓ | ✓ | x | ✓ | ✓ | ✓ | ✓ | ✓ | ✓ | ✓ | ✓ | ✓ | ✓ |
| 5 | x | x | ✓ | ✓ | ✓ | x | ✓ | x | x | x | x | x | ✓ | ✓ | ✓ | ✓ |

# XS series

Low profile robust proportional fingertip controllers
• non-contacting Hall effect technology

## WITH CASTLE HANDLE

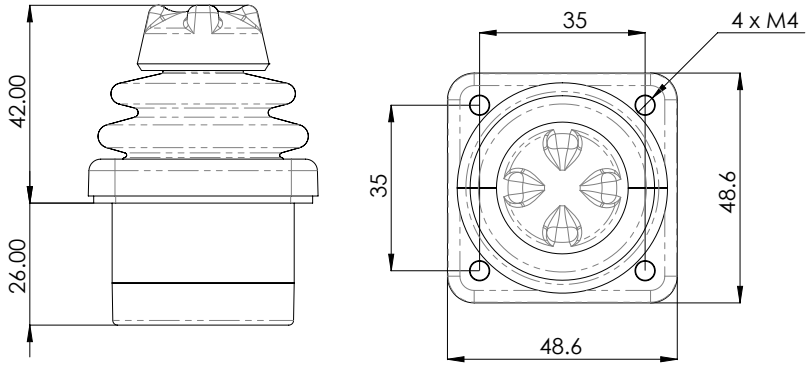


all measurements are in mm

## HANDLE OPTIONS

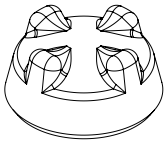

CA

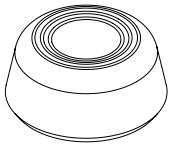

DM

| | | |
|---|---|---|
| MATERIAL | Nylon | Nylon |
| FINISH | Sparked Matt | Sparked Matt |
| STANDARD COLOR | Black | Black |
| NOTES | | |

# XS series

Low profile robust proportional fingertip controllers
• non-contacting Hall effect technology

## VOLTAGE OUTPUT OPTIONS

SINGLE OUTPUT - CONFIGURATION 1

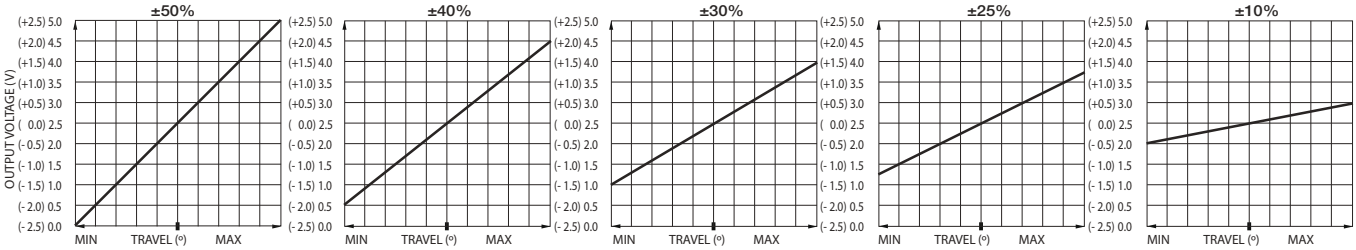


DUAL OUTPUT - CONFIGURATION 3

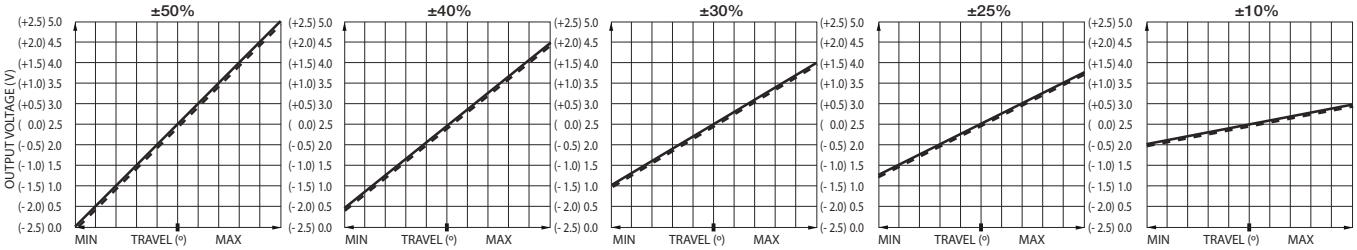


DUAL OUTPUT - CONFIGURATION 4

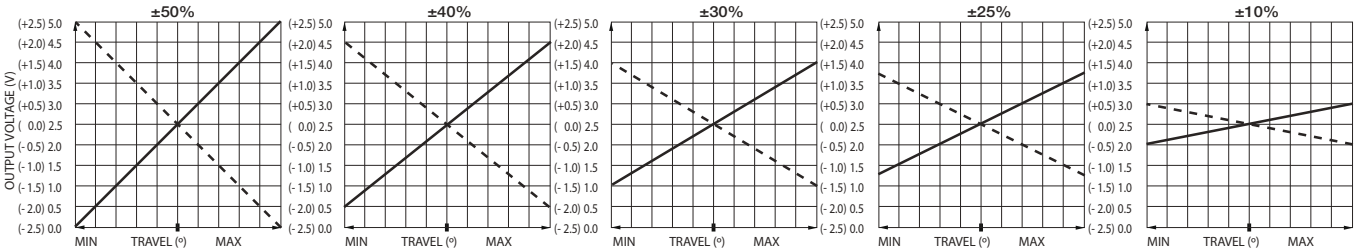


Output 1
Output 2

# XS series

Low profile robust proportional fingertip controllers
• non-contacting Hall effect technology

## CONFIGURATION

### POWER SUPPLY

The XS series is designed to be powered by a regulated 5 V ± 0.5 V power supply. The outputs are ratiometric, making a stable, noise free, power supply essential. The 3.3 V version of the XS series requires a power supply accurate to ± 0.1 V.

The outputs are not ratiometric, the voltage gain is set to 50 % as standard, giving an output range from 0 to 3.3 V regardless of supply voltage. The power supply to the joystick should be carefully regulated to be within tolerance. Should the power supply change outside of the specified tolerances, permanent damage may occur.

### MAGNETIC IMMUNITY AND SYSTEM DESIGN

The XS series incorporates internal magnetic screening to minimise the effect of external magnetic fields. Mounting or operating the joystick close to strong magnetic fields is not recommended. System designers should follow best practice when incorporating the XS series joystick into their products.

Care should be taken to decouple the power supply properly and to employ adequate EMC shielding.

### CENTER DETECT (CD)

Where selected, (configuration 1 types) the output on this additional cable will be 0V while the joystick is inactive. Should either the X or Y outputs change outside of the center tolerance, indicating that the joystick has been operated, the center detect signal will switch to 5 V.

Within the joystick this output is pulled high by a 2K2 resistor and is decoupled by a 100 nF capacitor to 0 V.

This output is designed for use in applications requiring an enable/disable signal that is separate from the main wipers. It is not recommended for use as a safety feature or a method of “person-present“ detection.

### CENTER TAP REFERENCE (CT)

Where selected, (configurations 1, 3 and 4) the joystick also outputs a center reference voltage that is set at 50% (±1%) of the supply voltage.

This output can be used to check the integrity of the power supply applied to the joystick. A reading on this output, outside of the specified tolerance suggests a problem with the power supply to the joystick.

The other purpose of this output is to act as a reference equal to the voltage output when the lever is at center.

Measuring the voltage outputs relative to CT rather than 0 V eliminates inaccuracies created by variation in supply voltage.

### GAIN OPTIONS

The voltage output, at full scale deflection is determined by the gain. The gain is expressed as a percentage of the voltage supplied. Therefore (assuming a 5 V supply) a joystick specified with ±2 5 % gain would yield 1.25 V at South, 2.5 V at center and 3.75 V at North.

A range of gain options are available as standard for configurations 1, 3 and 4.

All joysticks are supplied pre-set and no further calibration is needed throughout the lifetime of operation.

### OUTPUT IMPEDANCE

The voltage outputs at center and at each end of travel are specified across an infinite load, with no current flowing.

The output impedance specified in the electrical specification should be taken into account when designing a system. Load resistance of less than 10 K Ohms is not recommended.

### MECHANISM

The omni-directional mechanism utilizes an extremely robust ball-socket pivot. This construction yields an end product that is extremely resistant to vertical impact.

Furthermore it constantly withstands high pull, push, rotational or horizontal forces that the product may be subject to, during life.

### SPRINGING

All XS series are offered sprung to center. The standard spring force requires 1.3 N (nominally) to off-center the joystick. The XS series may be specified with a lighter spring (1 N), or a stronger spring (1.6 N).

### GUIDED FEEL

The XS series may also be specified with guided feel. A joystick with guided feel moves more readily towards the poles (N, S, E and W) and whilst it can still move away from the poles, the force required to do so is greater.

This standard configuration allows the user to move the joystick anywhere within the limiter with the same force and without any bias.

# Mouser Electronics

Authorized Distributor

Click to View Pricing, Inventory, Delivery & Lifecycle Information:

Apem:

XS140SCA12A62000 XS140SDM12A62000