Feb.1.2026 Copyright 2026 HIROSE ELECTRIC CO., LTD. All Rights Reserved.
In case of consideration for using Automotive equipment / device which demand high reliability, kindly contact our sales window correspondents.

| | COUNT | DESCRIPTION OF REVISIONS | BY | CHKD | DATE | | COUNT | DESCRIPTION OF REVISIONS | BY | CHKD | DATE |
|---|---|---|---|---|---|---|---|---|---|---|---|
| △ | | | | | . . | △ | | | | | . . |
| △ | | | | | . . | △ | | | | | . . |
| △ | | | | | . . | △ | | | | | . . |

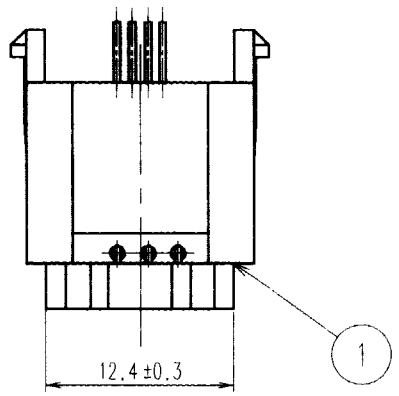


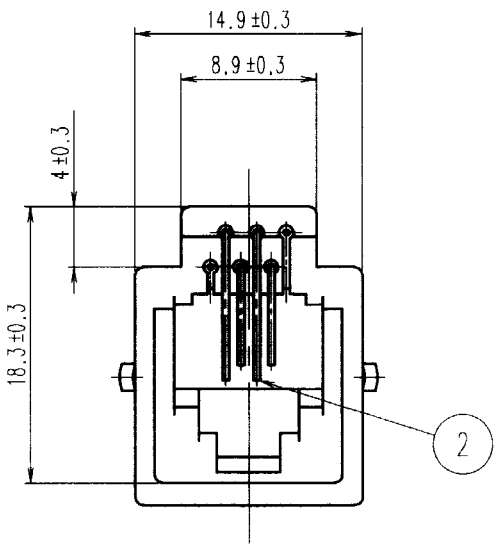


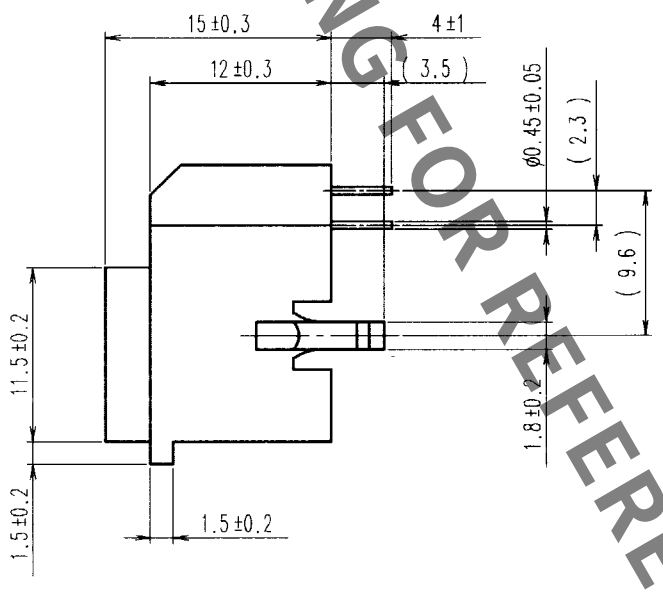


RECOMMENDED PC BOARD HOLE PATTERN (4:1)
(MOUNTING SIDE) t=1.6

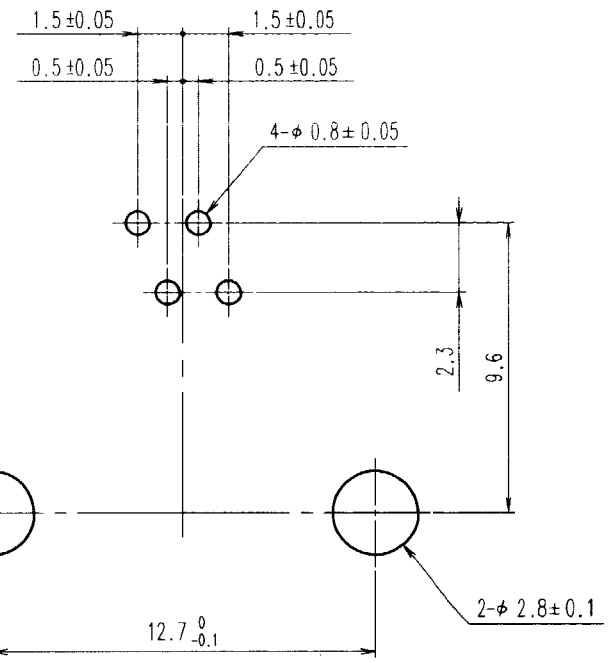


HRS DRAWING FOR REFERENCE

| NO. | MATERIAL | FINISH, REMARKS | NO. | MATERIAL | FINISH, REMARKS |
|---|---|---|---|---|---|
| 1 | PBT | UL94V-0 (VANILLA WHITE) | 2 | PHOSPHOR BRONZE | SELECTIVE GOLD PLATING 1.27μm |

| CODE NO.(OLD) | DRAWN | DESIGNED | CHECKED | APPROVED | RELEASED |
|---|---|---|---|---|---|
| | T Kamaya 03.12.15 | T Kamaya 03.12.15 | T.Watanabe 03.12.16 | H.Miura 03.12.16 | |

| | | |
|---|---|---|
| SCALE 2 : 1 | DRAWING NO. EDC3-021524-01 | PART NO. TM3RA-64(50) |
| UNITS mm | HRS HIROSE ELECTRIC CO.,LTD. | CODE NO. CL222-0584-7-50 1/1 |

FORM NO.229

| TO |
|---|
| Q |
| |
| |